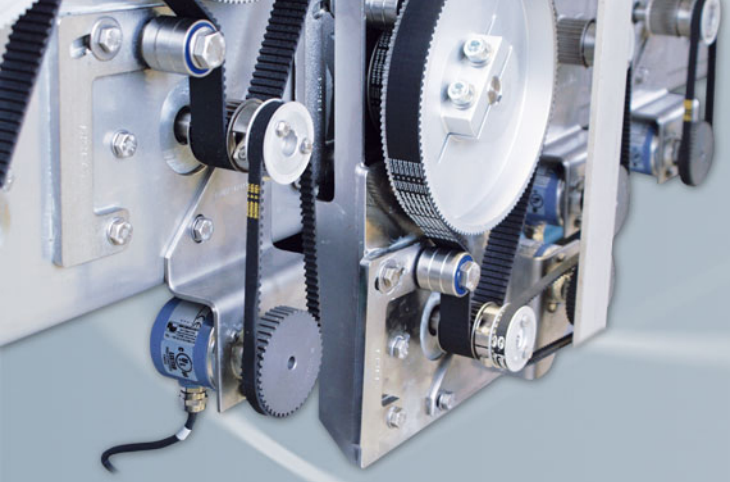

WACHENDORFF
Automation GmbH & Co. KG

Online Data Sheet

Encoder WDG 80H

www.wachendorff-automation.com/wdg80h

Wachendorff Automation

... systems and encoders

- Complete systems
- Industrial rugged encoders to suit your application
- Standard range and customer versions
- Maximum permissible loads
- 48-hour express production
- Made in Germany
- Worldwide distributor network

IndustrieROBUST

Encoder WDG 80 H

- Rugged and economical encoder
- High protection class IP65
- Bore size: 10 mm up to 27 mm
- Full connection protection with 10 VDC up to 30 VDC
- With light reserve warning
- Easy mounting
- Optional: -40 °C up to +80 °C

www.wachendorff-automation.com/wdg80h

Resolution	
Max. pulses per revolution PPR	up to 3840 PPR

Mechanical Data	
Housing	
Flange	hollow shaft (through-bored)
Flange material	aluminum
Housing cap	aluminum, powder coated
Torque supports	incl. 1 torque support WDGDS10001
- 1. Spring plate compensation	axial: ±0.8 mm, radial: ±0.2 mm
Housing	Ø 80 mm
Shaft(s)	
Shaft material	stainless steel
Starting torque	approx. 6 Ncm at ambient temperature
Fixing	2 x M4, DIN 913; Starting torque: 2,5 Nm
Shaft	Ø 10 mm
Shaft length	L: 46 mm
Max. Permissible shaft loading radial	200 N
Max. Permissible shaft loading axial	100 N
Shaft	Ø 12 mm
Shaft length	L: 46 mm
Max. Permissible shaft loading radial	200 N
Max. Permissible shaft loading axial	100 N
Shaft	Ø 15 mm
Shaft length	L: 46 mm
Max. Permissible shaft loading radial	200 N
Max. Permissible shaft loading axial	100 N
Shaft	Ø 18 mm
Shaft length	L: 46 mm
Max. Permissible shaft loading radial	200 N
Max. Permissible shaft loading axial	100 N
Shaft	Ø 20 mm
Shaft length	L: 46 mm
Max. Permissible shaft loading radial	200 N
Max. Permissible shaft loading axial	100 N
Shaft	Ø 25 mm
Shaft length	L: 46 mm
Max. Permissible shaft loading radial	200 N
Max. Permissible shaft loading axial	100 N
Shaft	Ø 27 mm
Shaft length	L: 46 mm
Max. Permissible shaft loading radial	200 N
Max. Permissible shaft loading axial	100 N
Bearings	
Bearings type	2 precision ball bearings
Nominale service life	3 x 10'10 revs. at 100 % rated shaft load 1 x 10'11 revs. at 40 % rated shaft load 1 x 10'12 revs. at 20 % rated shaft load
Max. operating speed	3500 rpm

Machinery Directive: basic data safety integrity level	
$MTTF_d$	200 a
Mission time (TM)	25 a
Nominale service life (L10h)	1 x 10'12 revs. at 20 % rated shaft load and 3500 rpm
Diagnostic coverage (DC)	0 %

Electrical Data	
Power supply/Current consumption	4,75 VDC up to 5,5 VDC: typ. 100 mA
Power supply/Current consumption	5 VDC up to 30 VDC: typ. 70 mA
Power supply/Current consumption	10 VDC up to 30 VDC: typ. 70 mA

Output circuit	TTL TTL, RS422 compatible, inv. HTL HTL, inv. 1 Vpp sin/cos
Pulse frequency	TTL ≤ 3840 ppr: max. 200 kHz HTL ≤ 3840 ppr: max. 200 kHz 1 Vpp sin/cos: max. 100 kHz
Channels	AB ABN and inverted signals
Load	max. 40 mA / channel @ 1 Vpp sin/cos: min. 120 Ohm
Circuit protection	circuit type G24, H24, I24, R24 only

Accuracy	
Phase offset	90° ± max. 7.5 % of the pulse length
pulse-/pause-ratio	50 % ± max. 7 %

General Data	
Weight	approx. 600 g
Connections	cable or connector, radial
Protection rating (EN 60529)	IP65 all around
Operating temperature	-20 °C up to +80 °C 1 Vpp: -10 °C up to +70 °C
Storage temperature	-30 °C up to +80 °C

More Information
General technical data and safety instructions **http://www.wachendorff-automation.com/gtd**
Options **http://www.wachendorff-automation.com/acc**

Cable connection K3, L3 with 2 m cable

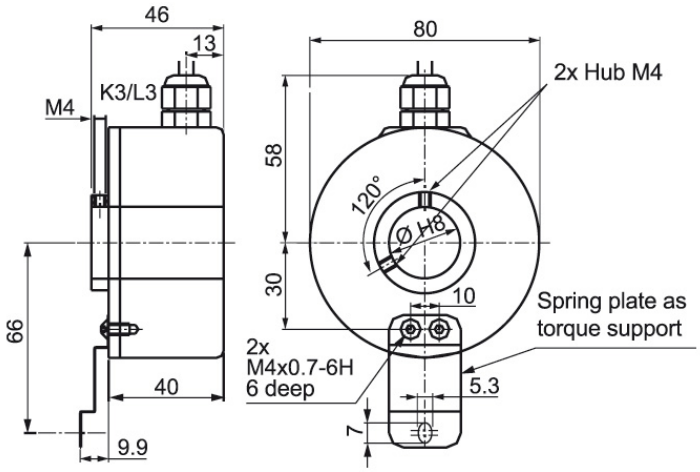

Description		ABN inv. poss.
K3	radial, shield not connected	•
L3	radial, shield connected to encoder housing	•

Assignments						
	K3, L3	**K3, L3**	**K3, L3**	**K3, L3**	**L3**	**L3**
Circuit	G05, G24	H05, H24, H30	I05, I24, 524	R05, R24, 245, R30	SIN	SIF
GND	WH	WH	WH	WH	WH	WH
(+) Vcc	BN	BN	BN	BN	BN	BN
A	GN	GN	GN	GN	GN	GN
B	YE	YE	YE	YE	GY	GY
N	GY	GY	GY	GY	BK	BK
Light reserve warning	PK	-	PK	-	-	RD
A inv.	-	-	RD	RD	YE	YE
B inv.	-	-	BK, (BU at ACA)	BK, (BU at ACA)	PK	PK
N inv.	-	-	VT	VT	VT	VT
Shield	flex	flex	flex	flex	flex	flex

Connector (M16x0.75) SH, 5-, 6-, 8-, 12-pin

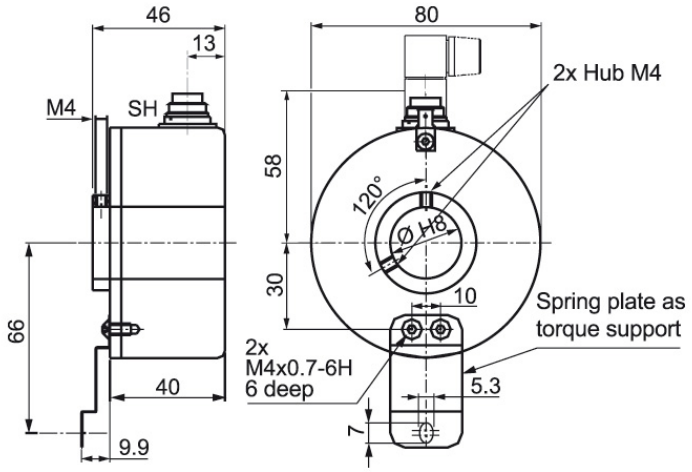

Description		ABN inv. poss.
SH5	radial, 5-pin, Connector connected to encoder housing	-
SH6	radial, 6-pin, Connector connected to encoder housing	-
SH8	radial, 8-pin, Connector connected to encoder housing	•
SH12	radial, 12-pin, Connector connected to encoder housing	•

Assignments

	SH5	SH6	SH6	SH8	SH8	SH8	SH12	SH12	SH12	SH12
	5-pin	6-pin	6-pin	8-pin	8-pin	8-pin	12-pin	12-pin	12-pin	12-pin
	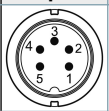	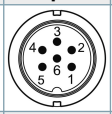	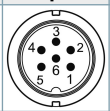	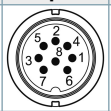	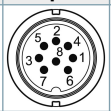	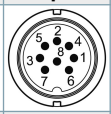	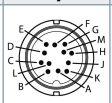	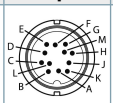	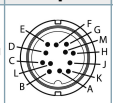	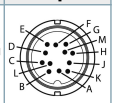
Circuit	H05, H24, H30	G05, G24	H05, H24, H30	H05, H24, H30	R05, R24, R30, 245	SIN	G05, G24	H05, H24, H30	R05, R24, 245, R30	SIN
GND	1	6	6	1	1	1	K, L	K, L	K, L	K, L
(+) Vcc	2	1	1	2	2	2	M, B	M, B	M, B	M, B
A	3	2	2	3	3	3	E	E	E	E
B	4	4	4	4	4	4	H	H	H	H
N	5	3	3	5	5	5	C	C	C	C
Light reserve warning	-	5	-	-	-	-	G	-	-	-
A inv.	-	-	-	-	6	6	-	-	F	F
B inv.	-	-	-	-	7	7	-	-	A	A
N inv.	-	-	-	-	8	8	-	-	D	D
n. c.	-	-	5	6, 7, 8	-	-	A, D, F, J	A, D, F, G, J	G, J	G, J
Shield	-	-	-	-	-	-	-	-	-	-

Connector (M16x0.75) S3, 7-pin

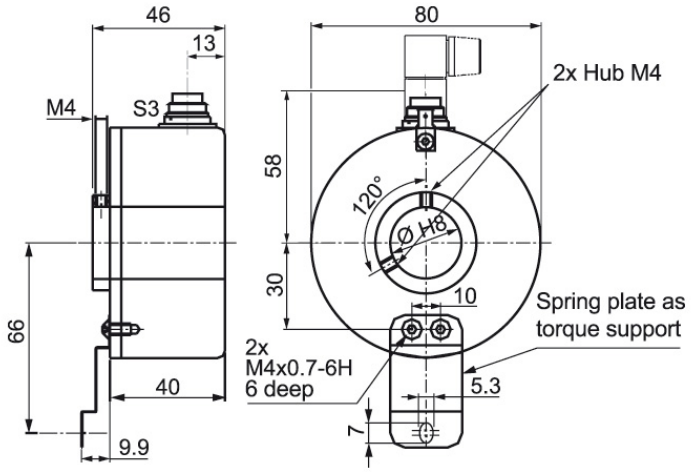

Description		ABN inv. poss.
S3	radial, 7-pin, Connector connected to encoder housing	-

Assignments		
	S3	**S3**
	7-pin	**7-pin**
	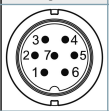	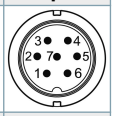
Circuit	G05, G24	H05, H24, H30
GND	1	1
(+) Vcc	2	2
A	3	3
B	4	4
N	5	5
Light reserve warning	6	-
A inv.	-	-
B inv.	-	-
N inv.	-	-
n. c.	7	6, 7
Shield	-	-

Connector (M23) S5, 12-pin

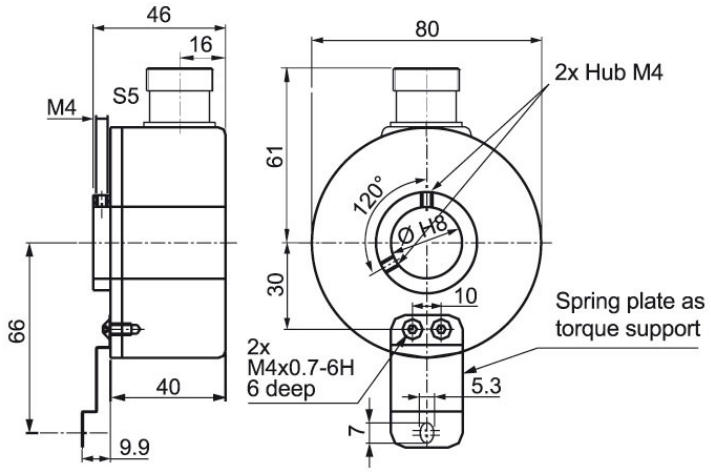

Description		ABN inv. poss.
S5	radial, 12-pin, Connector connected to encoder housing	•

Assignments						
	S5	**S5**	**S5**	**S5**	**S5**	**S5**
	12-pin	**12-pin**	**12-pin**	**12-pin**	**12-pin**	**12-pin**
	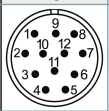	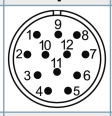	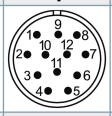	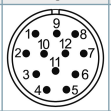	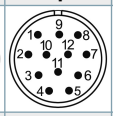	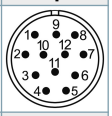
Circuit	G05, G24	H05, H24, H30	I05, I24, 524	R05, R24, 245, R30	SIN	SIF
GND	10	10	10	10	10	10
(+) Vcc	12	12	12	12	12	12
A	5	5	5	5	5	5
B	8	8	8	8	8	8
N	3	3	3	3	3	3
Light reserve warning	11	-	11	-	-	7
A inv.	-	-	6	6	6	6
B inv.	-	-	1	1	1	1
N inv.	-	-	4	4	4	4
n. c.	1, 2, 4, 6, 7, 9	1, 2, 4, 6, 7, 9, 11	2, 7, 9	2, 7, 9, 11	2, 7, 9, 11	2, 9, 11
Shield	-	-	-	-	-	-

Connector (M23) S5R, 12-pin (clockwise)

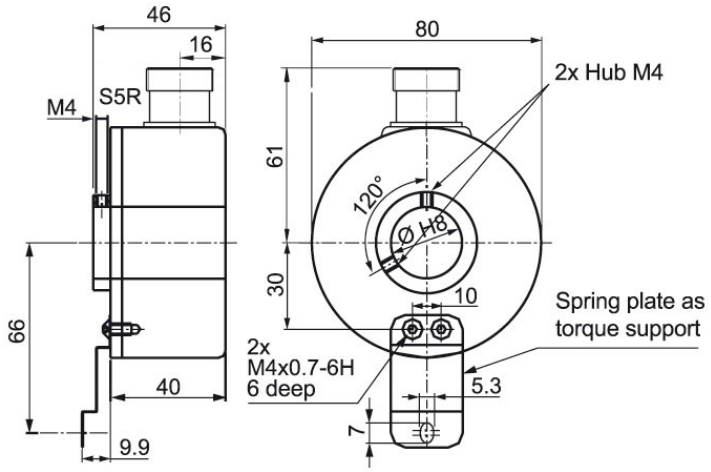

Description	ABN inv. poss.
S5R radial, 12-pin, Connector connected to encoder housing	•

Assignments

	S5R	S5R	S5R	S5R	S5R	S5R
	12-pin	12-pin	12-pin	12-pin	12-pin	12-pin
	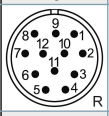	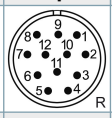	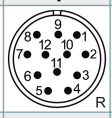	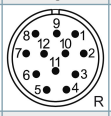	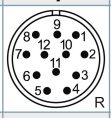	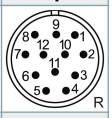
Circuit	G05, G24	H05, H24, H30	I05, I24, 524	R05, R24, 245, R30	SIN	SIF
GND	10	10	10	10	10	10
(+) Vcc	12	12	12	12	12	12
A	5	5	5	5	5	5
B	8	8	8	8	8	8
N	3	3	3	3	3	3
Light reserve warning	11	-	11	-	-	7
A inv.	-	-	6	6	6	6
B inv.	-	-	1	1	1	1
N inv.	-	-	4	4	4	4
n. c.	1, 2, 4, 6, 7, 9	1, 2, 4, 6, 7, 9, 11	2, 7, 9	2, 7, 9, 11	2, 7, 9, 11	2, 9, 11
Shield	-	-	-	-	-	-

Sensor-connector (M12x1) SC, 4-, 5-, 8-pin

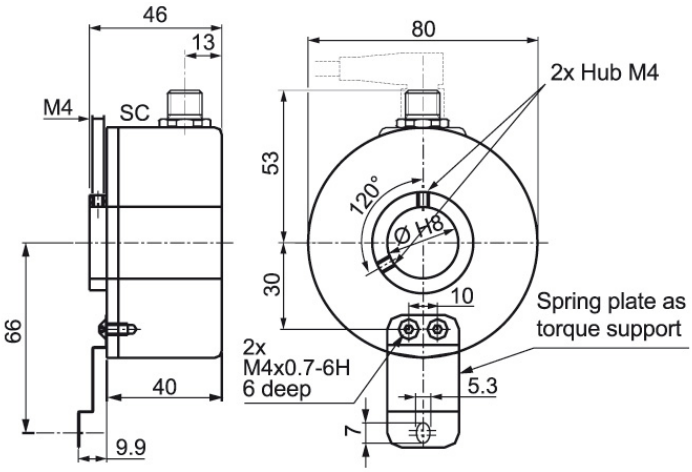

Description		ABN inv. poss.
SC4	radial, 4-pin, Connector connected to encoder housing	-
SC5	radial, 5-pin, Connector connected to encoder housing	-
SC8	radial, 8-pin, Connector connected to encoder housing	•

Assignments					
	SC4	**SC5**	**SC8**	**SC8**	**SC8**
	4-pin	**5-pin**	**8-pin**	**8-pin**	**8-pin**
	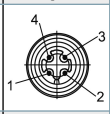	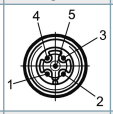	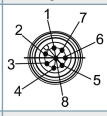	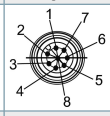	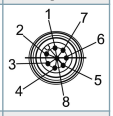
Circuit	H05, H24, H30	H05, H24, H30	H05, H24, H30	R05, R24, R30, 245	SIN
GND	3	3	1	1	1
(+) Vcc	1	1	2	2	2
A	2	4	3	3	3
B	4	2	4	4	5
N	-	5	5	5	7
Light reserve warning	-	-	-	-	-
A inv.	-	-	-	6	4
B inv.	-	-	-	7	6
N inv.	-	-	-	8	8
n. c.	-	-	6, 7, 8	-	-
Shield	-	-	-	-	-

Options

Low temperature	Order key
The encoder WDG 80H with the output circuit types G24, I24, G05, I05 is also available with the extended temperature range -40 °C up to +80 °C (measured at the flange).	**ACA**

Cable length	Order key
The encoder WDG 80H can be supplied with more than 2 m cable. The maximum cable length depends on the supply voltage and the frequency; see www.wachendorff-automation.com/atd Please extend the standard order code with a three figure number, specifying the cable length in decimetres. Example: 5 m cable = 050	**XXX = Decimeter**

Example Order No.	Type	Your encoder
WDG 80H	WDG 80H	WDG 80H

	Bore size	
25	10; 12; 15; 18; 20; 25; 27	

	Pulses per revolution PPR:	
1024	50, 100, 250, 500, 720, 1000, 1024, 1920, 2048, 2500, 3840 1 Vpp Sin/Cos only 1024 Other PPRs on request	

	Channels:	
ABN	AB, ABN	

	Output circuit					
	Resolution PPR	Power supply VDC	Output circuit	Light reserve warning	Order key	
G24	up to 2500	5 - 30	HTL	-	H30	
		5 - 30	HTL inverted	-	R30	
	up to 3840	4.75 - 5.5	TTL	•	G05	
		4.75 - 5.5	TTL	-	H05	
		4.75 - 5.5	TTL, RS422 comp., inverted	•	I05	
		4.75 - 5.5	TTL, RS422 comp., inverted	-	R05	
		10 - 30	HTL	•	G24	
		10 - 30	HTL	-	H24	
		10 - 30	HTL inverted	•	I24	
		10 - 30	HTL inverted	-	R24	
		10 - 30	TTL, RS422 comp., inverted	•	524	
		10 - 30	TTL, RS422 comp., inverted	-	245	
	1024	4.75 - 5.5	1 Vpp sin/cos	•	SIF	
		4.75 - 5.5	1 Vpp sin/cos	-	SIN	

	Electrical connections			
K3	Description	ABN inv. poss.	Order key	
	Cable: length (2 m standard, WDG 58T: 1 m)			
	radial, shield not connected	•	K3	
	radial, shield connected to encoder housing	•	L3	
	Connector: (shield connected to encoder housing)			
	connector, M16x0.75, 5-pin, radial	-	SH5	
	connector, M16x0.75, 6-pin, radial	-	SH6	
	connector, M16x0.75, 8-pin, radial	•	SH8	
	connector, M16x0.75, 12-pin, radial	•	SH12	
	connector, M16x0.75, 7-pin, radial	-	S3	
	connector, M23, 12-pin, radial	•	S5	
	connector, clockwise pin count, M23, 12-pin, radial	•	S5R	
	sensor-connector, M12x1, 4-pin, radial	-	SC4	
	sensor-connector, M12x1, 5-pin, radial	-	SC5	
	sensor-connector, M12x1, 8-pin, radial	•	SC8	

	Options		
	Description	Order key	
	Low temperature	ACA	
	Without option	Empty	
	Cable length	XXX = Decimeter	

Example Order No.=	WDG 80H	25	1024	ABN	G24	K3		WDG 80H							Your encoder

WACHENDORFF
Automation GmbH & Co. KG
Authorized Distributor

For further information please contact our local distributor.
Here you find a list of our distributors worldwide.
http://www.wachendorff-automation.com/distributors_worldwide.html

WACHENDORFF

Wachendorff Automation GmbH & Co. KG
Industriestrasse 7 • D-65366 Geisenheim

Phone: +49 67 22 / 99 65 25
Fax: +49 67 22 / 99 65 70
E-Mail: wdg@wachendorff.de
www.wachendorff-automation.de